Your Guide to the Electronic Control of Fluid Power

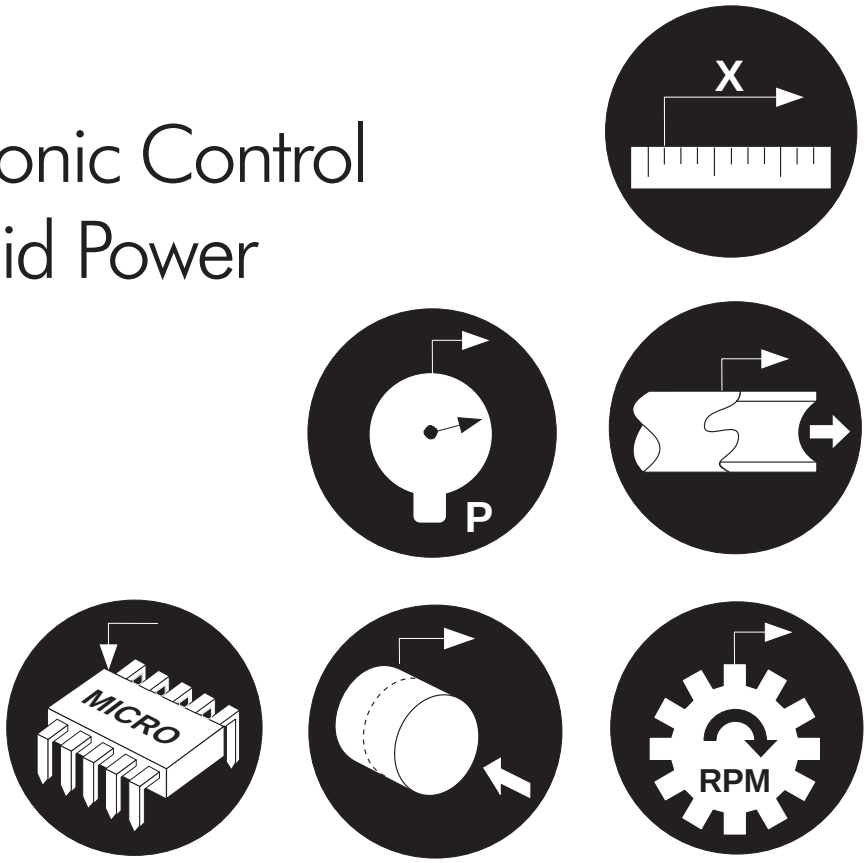

The members of the National Fluid Power Association (NFPA) have prepared this handbook as an introduction to the electronic control of fluid power. The applications and components described here are representative — electrohydraulics and electropneumatics can be effectively utilized in countless processes, and components are available in many different sizes and configurations.

NFPA's manufacturers invite you to contact them for additional information.

National FLUID POWER Association®

ISBN 0-942220-28-5

Electropneumatics at Work

Multiple Welding Machine

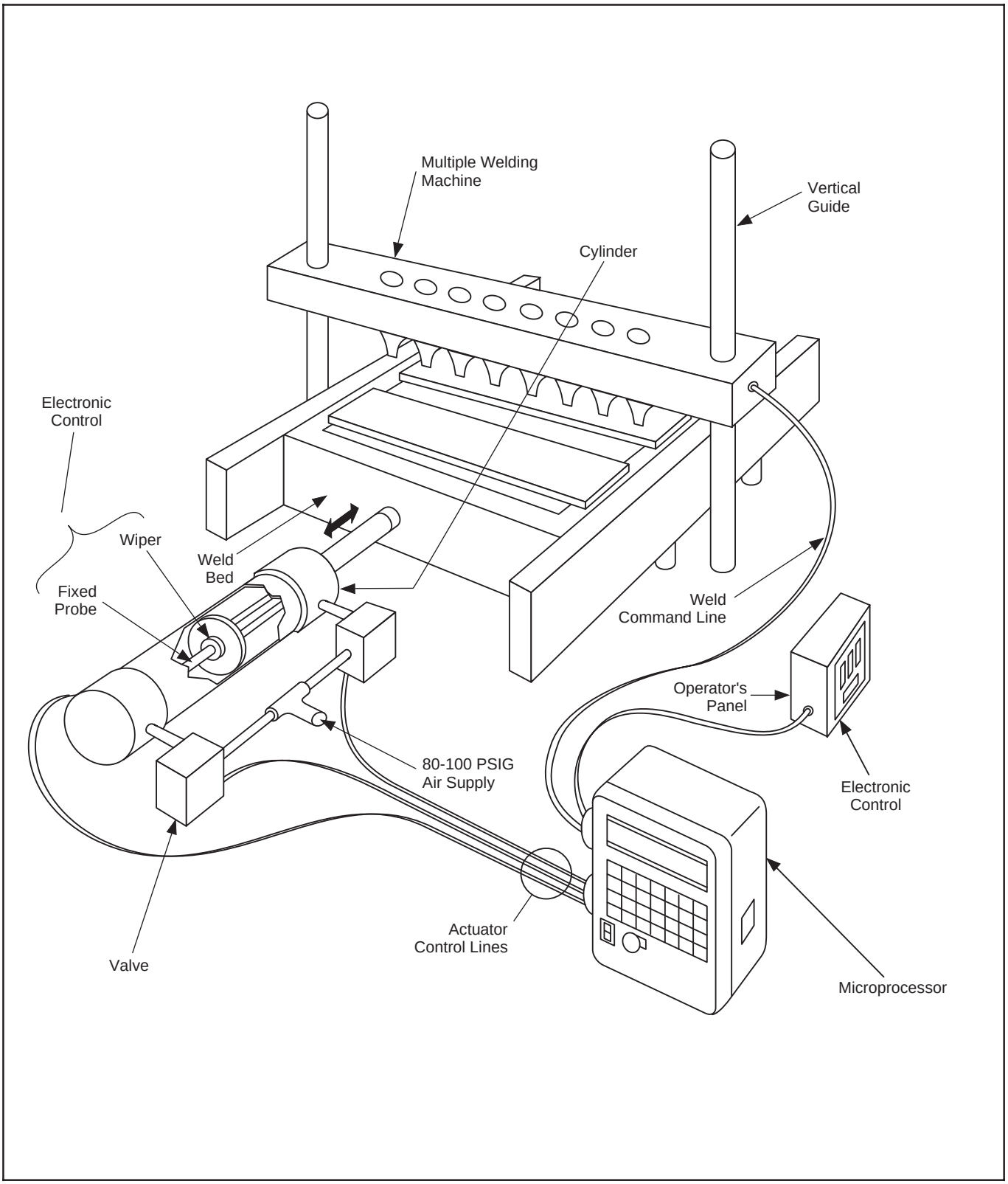

The Problem

Quick, accurate, repetitive positioning of a heavy machine bed was essential if the goal of automatic multiple welding was to be achieved. The actuation system had to work reliably, without downtime, day after day. A critical requirement was that the actuators and controls had to be affordable, and not an adaptation of space-age servo systems.

Electric motor drives and other electromechanical systems were considered, but they would have been bulky and expensive.

Its Solution

Electropneumatic actuation was the answer. The system that was finally designed (see the illustration) is simple and straightforward. A $3^1/_4$ inch bore controlled pneumatic cylinder, with a 36 inch stroke and a 1 inch diameter rod, propels a 3000 pound weld bed to within $^1/_{16}$ inch accuracy. It does it faster than an electromechanical system, and with infinite selectability so that parts of different dimensions can be handled.

Here is how it works. Position is sensed with a resistance type transducer, used as a voltage divider, integral with the cylinder. The position probe itself is fixed at the blind end of the cylinder, and fits inside the hollow piston rod. As the piston moves in or out, a wiper (slide contact) moves with it, and slides along the probe. Electronic controls measure the voltage of the probe-wiper circuit, which will be proportional to the position of the rod.

If this position differs from that called for from the operator's control panel, electronic signals are sent to the electropneumatic proportional directional control valves which apply compressed air to one end or the other of the cylinder to reposition the rod.

This actuator design eliminates the need for external, single-position limit switches, and makes it possible for a single multi-position cylinder, rather than several limited-position cylinders, to control the bed motion at every point of its travel.

Related Applications

Electropneumatic actuators with electronic position sensing can serve ably in any application where quick motion under complete control is required. By adding microprocessors, even acceleration and deceleration can be modulated. Examples of applications for infinitely controllable pneumatic cylinders include assembly machines and pick-and-place robots.

How Electronics Improved This Application

- Speed
- Accuracy
- Automation
- Adjustable sequence and timing
- Flexible placement of control
- Monitoring and diagnostics
- Standard components
- Upgradability

Components Used in Pneumatic Systems*

Actuators	Hose
After Coolers	Manifolds
Air Compressors	Motors
Air Dryers	Mufflers
Air Line Lubricators	Regulators
Controls (electronic) and Software	Rotary Actuators
Cylinders	Seals
Filters	Shock Absorbers
Filter/Regulators	Slides
FRLs	Switches
Fittings	Tubing
Gauges	Vacuum Products
Grippers	Valves

***Click here to access the NFPA Fluid Power Product Locator, which includes information about and links to NFPA member companies.**

From *Your Guide to the Electronic Control of Fluid Power*, a publication of the National Fluid Power Association.